| | REVISIONS | | | | | |
|---|---|---|---|---|---|---|
| ZONE | LTR. | DESCRIPTION | ECN NO. | DATE | BY | APPR'D |
| | A | RELEASED FOR PRODUCTION | DR14231 | 24APR07 | LD | |
| 3A<br>4C | B | B1 UPDATE ASSEMBLY TO PUMP CAP/DOME COVER PLATE DESIGN<br>B2 ADD WIRE HARNESS DETAIL<br>B3 RV000316 WAS RV0000318<br>B4 TU221 WAS FM0001957 ON CHART DRAWING SA00043387 | DR23827<br>71893<br>72049 | 06MAY09 | WDE | DJC |
| 4A | C | C1 REPLACED "HOT STAMP INFO" WITH "MARKING INFO" | 73288 | 06DEC10 | SLK | DJC |

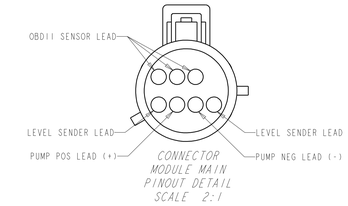


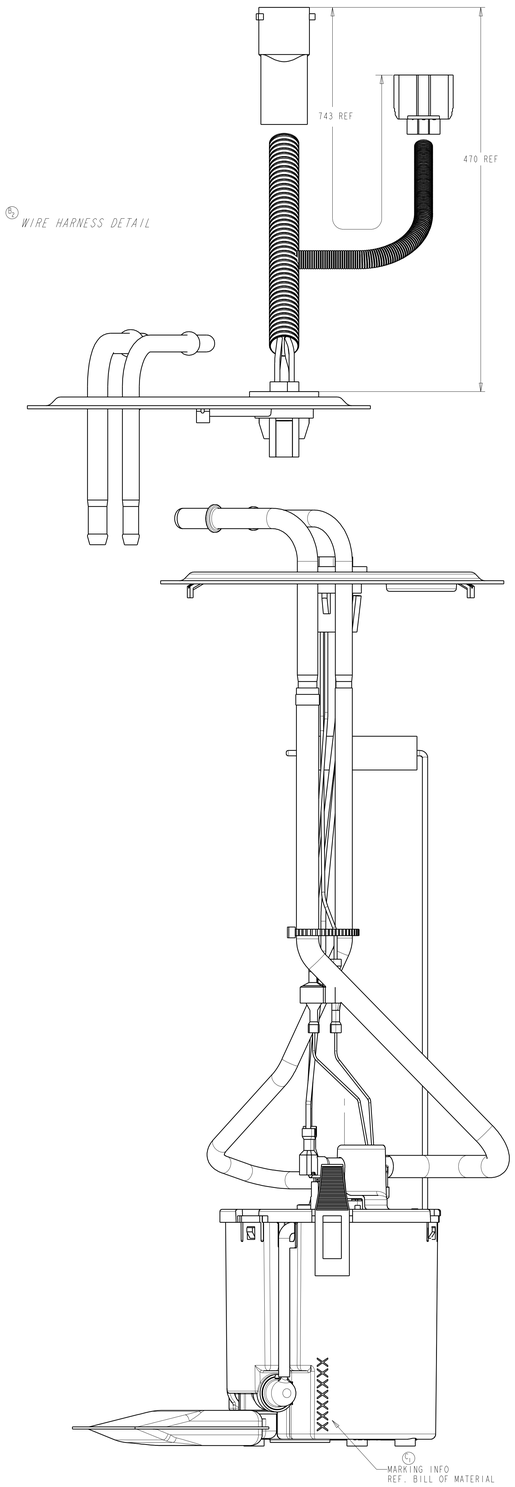


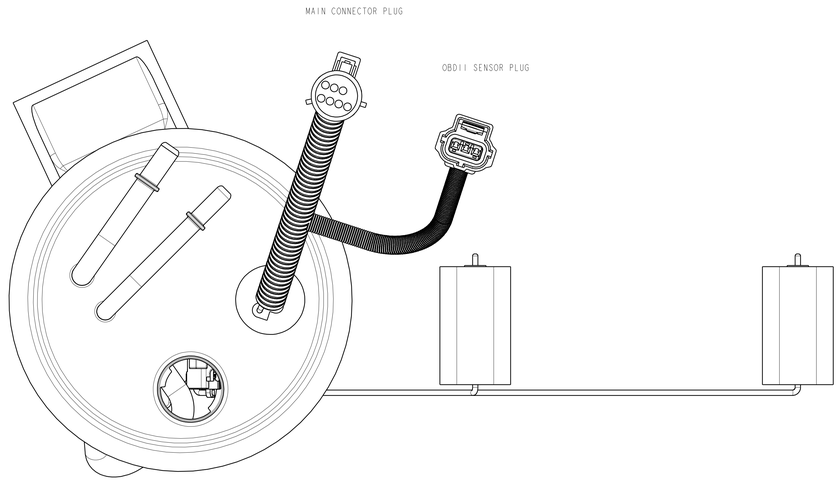


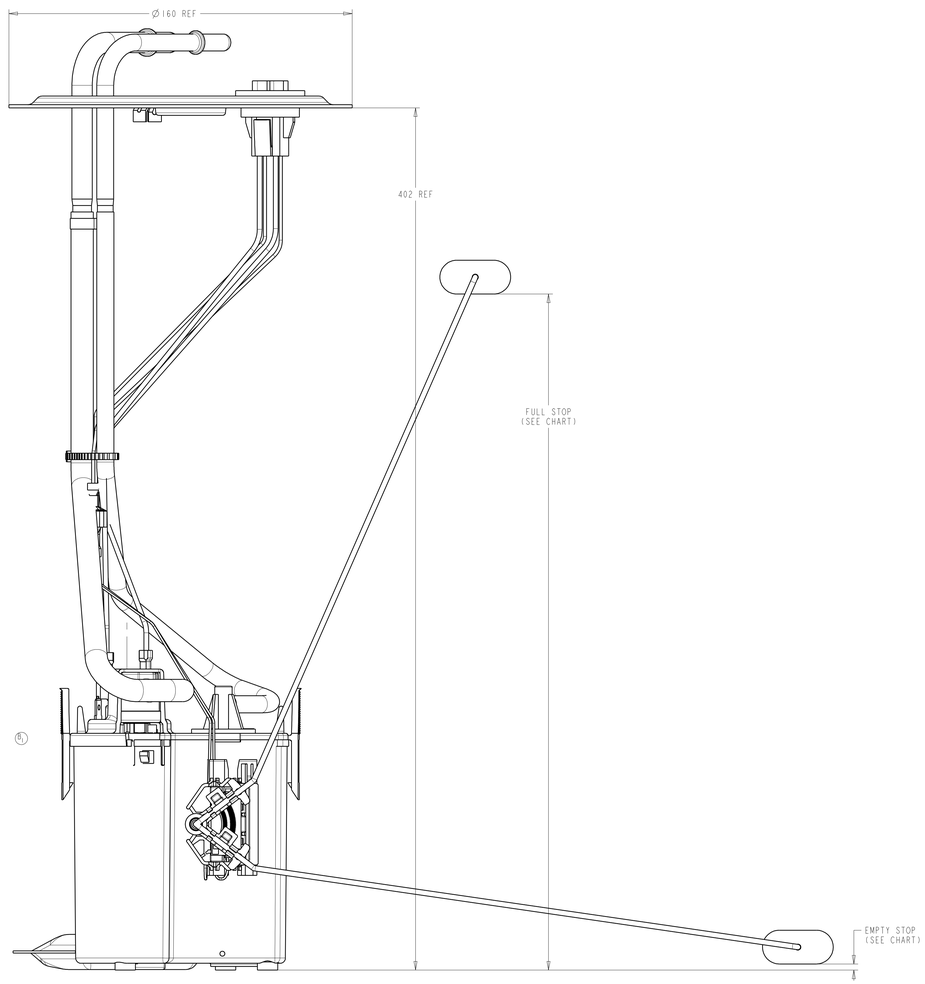


| FLOAT POSITION | RESISTANCE (OHMS) |
|---|---|
| FULL STOP (315.5) | 160.5±3.0 |
| EMPTY STOP (3.1) | 15±1 |

NOTE:

1. SPECIAL CUSTOMER PACKAGING REQUIREMENTS MAY CALL FOR THE ADDITION OF SPECIFIC LABELS NOT SHOWN ON THIS DRAWING.
2. SHOWN WIRE ROUTING MAY DIFFER FROM FINISHED PRODUCT.
3. SHOWN RESISTOR CARD AND PUMP TERMINATION MAY DIFFER FROM FINISHED PRODUCT.


TI Automotive (Aftermarket) Limited and TI Automotive (UK) Limited PROPRIETARY RIGHTS. IN THE EVENT WRITTEN CONSENT HAS BEEN GIVEN TO THIS DRAWING AND RECEIVED ALL INFORMATION, THE FOLLOWING CONDITIONS APPLY: THIS DRAWING SHALL NOT BE REPRODUCED IN WHOLE OR IN PART EXPRESS CONDITION THAT IT WILL BE RETURNED UPON REQUEST. THIS DRAWING SHALL NOT BE DISCLOSED TO THIRD PARTIES WITHOUT EXPRESS WRITTEN CONSENT. THIS DRAWING SHALL NOT BE USED FOR ANY PURPOSE OTHER THAN THE PRODUCTION OF THE ITEMS SHOWN HEREIN. NO RIGHTS FROM EXCEPT OF THE ARTICLE OR PART SHOWN HEREIN ARE GRANTED. TI Automotive (UK) LIMITED WRITTEN CONSENT. NO RIGHTS OTHER THAN THE RIGHT TO GIVEN OR WHICH MAY BE THE PRODUCTION OF THIS DRAWING IS GRANTED.


◢ DENOTES ASSEMBLY/TEST/PROCESS
Ⓢ DENOTES SAFETY CHARACTERISTIC
◊ DENOTES SIGNIFICANT CHARACTERISTIC

INTERNAL USE ONLY
DISTRIBUTION CODE
AF

REF- FM0001957

DO NOT SCALE PRINT

DIMENSIONS AND TOLERANCES PER ANSI/ASME Y14.5M - 1994

PROJECTION: PRO-E

SIZE: E

TOLERANCE UNLESS OTHERWISE SPECIFIED:
X ±0.76
.XX ±0.25
.XXX ±0.13
ANGLE ±1/2°
CONCEN. 0.08

MATERIAL

FINISH

TI Automotive
AFTERMARKET DIVISION
630 COLUMBIA STREET
CARO, MICHIGAN 48723

SCALE: 1:1
DATE: 24/04/07
DRN. BY: L.DHIMAN
CHK'D BY:
APPR'D BY:

TITLE: FUEL MODULE OUTLINE

DRAWING NO. TU221

REV. C